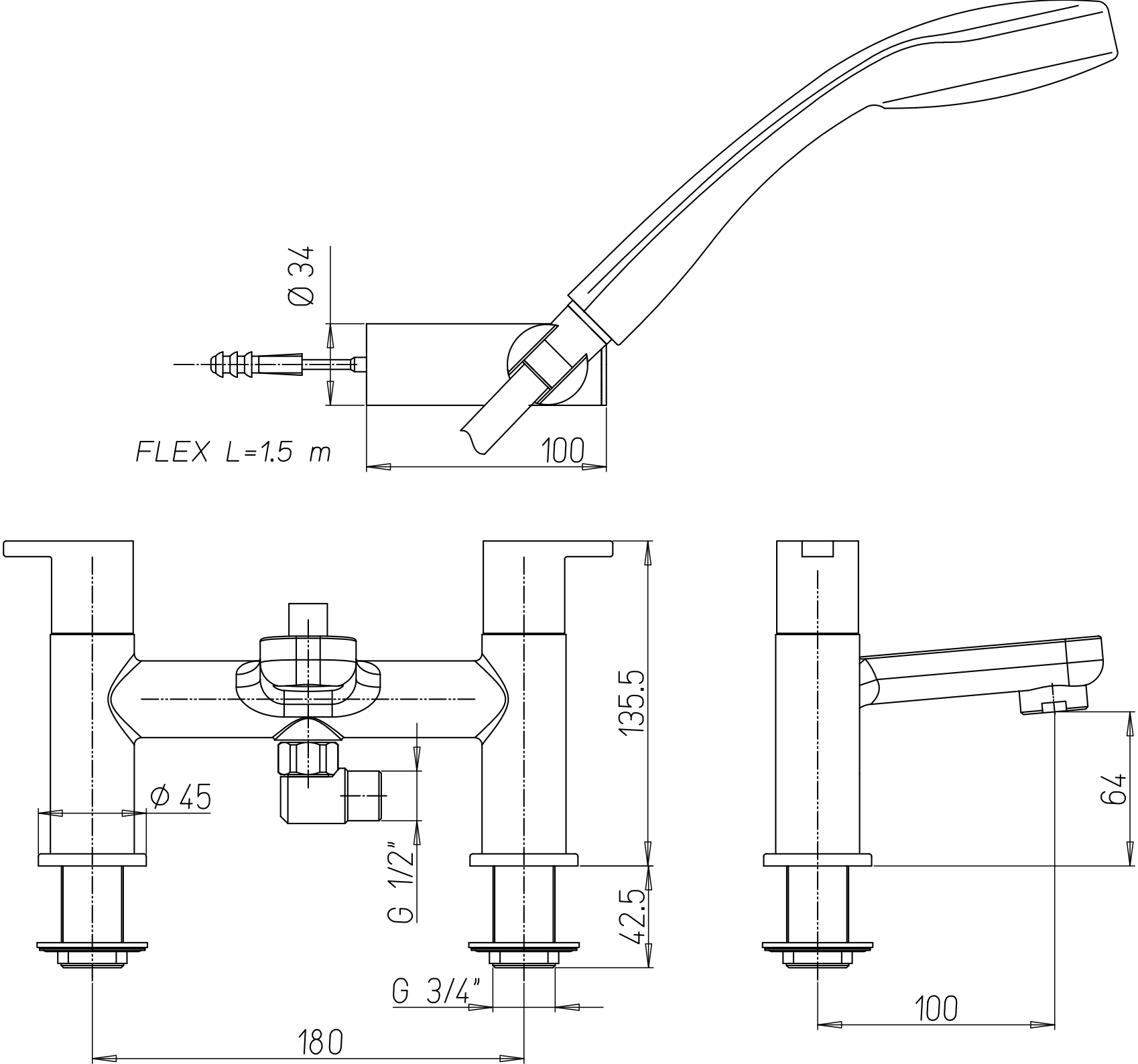
Ø 34
FLEX L=1.5 m
100
135.5
Ø 45
G 1/2"
42.5
G 3/4"
180
64
100